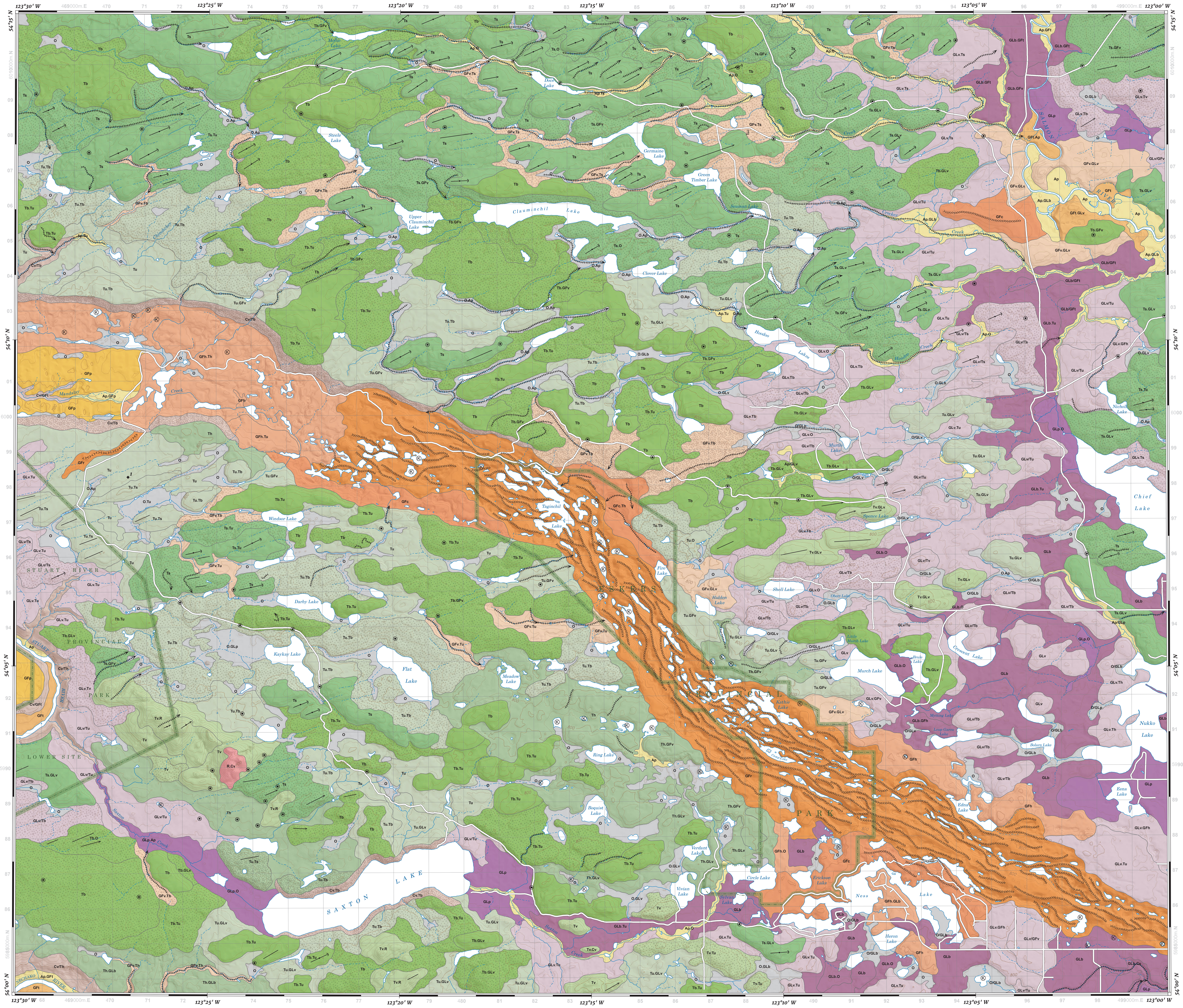

North American Datum 1983
Shaded relief and contour lines derived from the digital elevation model supplied by Natural Resources Canada. Illumination: azimuth 315°, altitude 45°, vertical exaggeration 1x.
Base map at the scale of 1:50 000 from Natural Resources Canada, with modifications.
Contour interval 10 metres. Elevations in metres above mean sea level.

ONE THOUSAND METRE GRID
UNIVERSAL TRANSVERSE MERCATOR GRID
ZONE 10 NORTH

GRID NORTH 0°12′ WEST OF TRUE NORTH.
APPROXIMATE MEAN MAGNETIC DECLINATION 2021 FOR CENTRE OF MAP IS 16°51′ EAST, DECREASING ANNUALLY 12.6′

Disclaimer: whilst every effort has been taken to ensure the accuracy of the information on this map, the data are provided 'as-is', without any warranty, guarantee, or representation of any kind, whether expressed or implied. It is the responsibility of the user to check the facts before enetering any financial or other commitment based upon this information. This map is not intended for navigation purposes.

Geoscience BC Map 2021-03-06a

Surficial geology of the Saxton Lake area NTS 093J/03, British Columbia

Geology by C. McGregor and D. Sacco

1 0 1 2 3 4 5
KILOMETRE SCALE

Scale 1:50,000

Cartography by B. Elder

Legend

Notes: Where surficial geology map units are composed of multiple materials, a compound map unit designator is used, separating more extensive materials from less extensive (e.g., for Tb.Th, Tb is more extensive than Th) or separating overlying materials from underlying material (e.g., for Cv/Tb, Cv overlies Tb). A common legend was used for this map series; therefore, not all units in the legend necessarily occur on each individual map.

ANTHROPOGENIC DEPOSITS

- **H** — ***Anthropogenic deposits:*** mine tailings, rubble, diamicton, sand and gravel; variable thickness; flat-lying to steeply sloping deposits emplaced by human activity, or excavations; typically near mine sites or along service roads.

QUATERNARY SURFICIAL DEPOSITS

HOLOCENE

- **O** — ***Organic deposits, undifferentiated:*** live and decaying plant material in bogs, marshes, fens, and swamps; variable thickness; forms relatively flat-lying deposits.
- **Cv** — ***Colluvial sediments, veneer:*** poorly sorted diamicton and rubble derived from local bedrock and sediments; generally < 2 m thick and may form discontinuous cover; consists of gravity-induced deposits occurring on moderate to steep slopes.
- **Cb** — ***Colluvial sediments, blanket:*** poorly sorted diamicton and rubble derived from local bedrock and sediments; generally > 2 m thick and forming a continuous mantle; consists of gravity-induced deposits occurring on or below moderate to steep slopes.
- **Cz** — ***Landslide deposits:*** diamicton and rubble; variable thicknesses, but generally > 2 m thick; forming a chaotic and hummocky morphology; typically occurs on lower slopes and valley floors originating from larger-magnitude landslide events; includes inactive and potentially active landslides.
- **Ap** — ***Alluvial sediments, floodplain:*** sorted sand, gravel, minor silt, and may include minor organic deposits; variable thickness; forming flat-lying topography deposited by modern drainage systems, typically in valley bottoms; prone to flooding.
- **At** — ***Alluvial sediments, terrace:*** sorted sand, gravel, minor silt, and may include minor organic deposits; variable thickness; forming gently sloping to flat-lying deposits perched above modern streams.
- **Ev** — ***Aeolian sediments, veneer:*** well sorted sand and silt; generally < 2 m thick and may form discontinuous cover; transported and deposited by wind and may include poorly-formed dune structures; commonly overlies glaciofluvial or glaciolacustrine deposits.
- **Er** — ***Aeolian sediments, dunes:*** well sorted sand and silt; variable thickness generally > 2 m; transported and deposited by wind and forming transverse, parabolic, or poorly formed dune structures; commonly overlies glaciofluvial or glaciolacustrine deposits.

FRASER GLACIATION (LATE WISCONSINAN)

- **GLv** — ***Glaciolacustrine sediments, veneer:*** < 2 m thick; thin to discontinuous, stratified to massive sand, silt and clay deposited within glacial lakes; mantles underlying topography; prone to gullying.
- **GLb** — ***Glaciolacustrine sediments, blanket:*** stratified to massive, well sorted, sand, silt, and clay; generally > 2 m thick; forming a continuous mantle that subdues surface expression of underlying topography; deposited within deep water of former glacial lakes; prone to gullying and gravity-induced slope failures.
- **GLp** — ***Glaciolacustrine sediments, plain:*** stratified to massive, well sorted sand, silt, and clay; generally > 2 m thick; forming flat-lying to gently sloping deposits that obscure the surface expression of underlying topography; deposited within deep water of former glacial lakes; prone to gullying and gravity-induced slope failures.
- **GLr** — ***Glaciolacustrine sediments, beach:*** well sorted sand and gravel; may be cross bedded or poorly laminated; variable thickness; typically forming a series of ridges deposited by wave action in former glacial lakes.
- **GFv** — ***Glaciofluvial sediments, veneer:*** well- to poorly-sorted sand and gravel; generally < 2 m thick and may form discontinuous cover; deposited directly by glacial meltwater.
- **GFp** — ***Glaciofluvial sediments, plain:*** > 2 m thick; flat to gently sloping materials deposited by meltwater in front of or adjacent to glaciers; typically composed of fining upward sequences of stratified, moderately- to well-sorted sand and gravel; may contain kettle holes.
- **GFt** — ***Glaciofluvial sediments, terrace:*** stratified, moderately- to well-sorted sand and gravel; typically consist of fining upward sequences; generally > 2 m thick; forming flat-lying to gently sloping topography; deposited directly by meltwater in front of or adjacent to glaciers; generally perched above modern streams or alluvial deposits.
- **GFf** — ***Glaciofluvial sediments, fan:*** stratified gravel, sand, and minor diamicton beds; variable thickness; forming fan-shaped features with convex upper surface and wedge-shaped profile; deposited directly by meltwater in front of or adjacent to glaciers; generally found at the lower ends of meltwater channels.
- **GFh** — ***Glaciofluvial sediments, hummocky to undulating:*** weakly-stratified, poorly- to moderately-sorted sand and gravel with minor diamicton; variable thickness; deposited by meltwater in an ice stagnation setting or in association with buried ice blocks.
- **GFc** — ***Glaciofluvial sediments, ice contact:*** composition can include poorly sorted coarse sand and gravel with minor diamicton and lenses of fine sand and silt, to sorted and stratified sand and gravel; variable thickness; forming a complex of glaciofluvial landforms including hummocky topography and eskers; deposited by meltwater in association with glacial ice.
- **GFr** — ***Glaciofluvial sediments, esker:*** stratified sand and gravel; variable thickness; forming a single ridge or complex of ridges; deposited by meltwater within tunnels, on the surface of, or beneath glacial ice.
- **Tv** — ***Glacial sediments, till veneer:*** typically a dense, silty-sand to sandy-silt, matrix-supported diamicton containing pebbles, cobbles and boulders; generally < 2 m thick and may include minor bedrock outcrop; follows surface expression of underlying bedrock; subglacial till deposited by lodgement or meltout processes at the base of glaciers.
- **Tb** — ***Glacial sediments, till blanket:*** typically a dense, silty-sand to sandy-silt, matrix-supported diamicton containing pebbles, cobbles and boulders; generally > 2 m thick; forming a continuous mantle that subdues surface expression of underlying bedrock; subglacial till deposited by lodgement or meltout processes at the base of glaciers.
- **Ts** — ***Glacial sediments, streamlined till:*** typically a dense, silty-sand to sandy-silt, matrix-supported diamicton containing pebbles, cobbles and boulders; variable thickness; represents flutings, drumlins, and the sediment portion of crag and tails; hollows between streamlined landforms may contain minor amounts of glaciofluvial or alluvial material; subglacial till deposited by lodgement processes at the base of glaciers.
- **Tu** — ***Glacial sediments, undulating till:*** typically a sand-rich diamicton that can be clast or matrix-supported, and composed of ablation material from within or on top of the glacier; variable thickness, but generally between 1–3 m; forming gently sloping hillocks and hollows, and may interfinger with glaciofluvial deposits; deposited in association with stagnating glaciers or detached ice blocks and meltwater; commonly formed at the margins of stagnating ice and overlies lodgement till; generally derived from distal sources and not sampled in till geochemical or mineralogical surveys.
- **Th** — ***Glacial sediments, hummocky till:*** typically a sand-rich diamicton that can be clast or matrix supported composed of ablation material from within or on top of the glacier; variable thickness, but generally > 2 m; forming moderately to steeply sloping hillocks and hollows, and may interfinger with glaciofluvial deposits; deposited in association with stagnating glaciers and meltwater; commonly in valley bottoms where glacial ice stagnated, and overlies lodgement till; generally derived from distal sources and not sampled in till geochemical or mineralogical surveys.

PRE-QUATERNARY

- **R** — ***Bedrock, undifferentiated:*** lithology varies across the map area, and may include minor till or colluvial veneers; forming gently to steeply sloping exposures of bedrock; commonly found in upland areas or as a result of deep meltwater incision.

GEOMORPHOLOGICAL PROCESSES (OVERLAY)

- ***Minor sediment reworking:*** used on polygons containing till where less than half of the till was affected by meltwater, glacial lakes, colluvial processes or modern drainage.
- ***Major sediment reworking:*** used on polygons containing till where greater than half of the polygon was affected by meltwater, glacial lakes, colluvial processes or modern drainage.

ONSITE SYMBOLS

- Spillway
- Meltwater channel:
  - Paleocurrent direction known
  - Paleocurrent direction unknown
- Esker:
  - Paleocurrent direction known
  - Paleocurrent direction unknown
- Fluted bedrock or drift:
  - Paleocurrent direction known
  - Paleocurrent direction unknown
- Crag-and-tail landform
- Drumlin
- Kettle
- Kame
- Bedrock outcrop
- Till sample site
- Mineral occurrence (see Table 1; numbers indicate Map ID)
  - Past Producer
  - Prospect
  - Developed Prospect
  - Showing
- Park or protected area
- Road[1]
- Rail line
- Stream[2]
  - Definite
  - Intermittent or indefinite

1 - Roads displayed on map are from the CanVec 1:50k database (Natural Resources Canada) and do not include the extensive gravel forest service road network present in the area.

2 - Classification provided by BC Freshwater Atlas.

Table 1. Mineral occurrences from MINFILE database (MINFILE, 2020). Letter and number designation under deposit type correspond to definitions provided by Lefebure and Ray (1995) and Lefebure and Höy (1996).

Map ID	MINFILE No.	Name	Status	Commodity	Deposit Type
1	103I220	KHTADA LAKE	Showing	Sillimanite, Garnet	P02: Kyanite-sillimanite schists

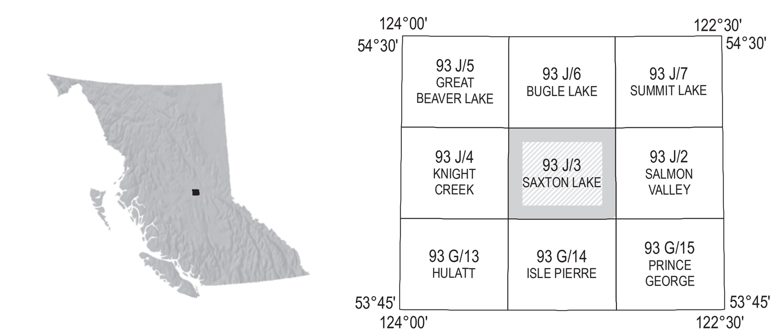

INDEX TO ADJOINING MAPS OF THE NATIONAL TOPOGRAPHIC SYSTEM

Descriptive Notes

The mapping presented here is part of a series of surficial geology, till sampling suitability, and drift thickness maps completed for Geoscience BC's **C**entral **I**nterior **C**opper-**G**old **R**esearch **(CICGR)**: Surficial Exploration Project (See index map). The purpose of this map series is to inventory and characterize surficial materials and landforms to inform resource exploration (*e.g.*, mineral, water and aggregate) and infrastructure development in British Columbia. The surficial geology interpretations follow standardized mapping protocols defined by the Geological Survey of Canada (Deblonde *et al.*, 2018) and used by the British Columbia Geological Survey, ensuring accordance with existing and ongoing surficial geology mapping produced by the government. Polygons are delineated based on surficial material and morphology, and overlays are used to indicate geomorphological processes. Features such as bedrock outcrop or glaciofluvial landforms that are too small to delineate as polygons are identified using point and line symbols. The surficial geology was interpreted from 1.5 m resolution colour and near-infrared SPOT satellite imagery. Pseudo-stereo models were produced from the imagery using the Canadian Digital Elevation Model (Natural Resources Canada, 2015). The till sampling suitability mapping builds on earlier drift exploration potential maps developed by Proudfoot *et al.* (1995) and basal till potential mapping (*e.g.*, Sacco *et al.*, 2014; Ferbey, 2014).

This map series was initiated to streamline the CICGR regional till geochemical and mineralogical sampling program. Subglacial till is ideal for assessing bedrock hosted mineral potential in areas covered by Quaternary sediments because it is commonly the first derivative of bedrock (Shilts, 1993), it has a relatively simple and predictable transport history related to ice-flow directions, and geochemical and mineralogical anomalies in till are more extensive than its bedrock source (Levson, 2001). This mapping focuses on identifying discrete occurrences of subglacial till to guide exploration programs. In central British Columbia, it is specifically important to distinguish subglacial till facies from ablation till facies, as ablation till has a more complex transport and depositional history and, therefore, is less suitable for mineral exploration.

Till sampling suitability is derived from the surficial geology interpretations. Each mapped polygon is attributed a suitability using a multi-class index that considers the proportions of surficial materials and geomorphological processes that have affected them. Suitability ratings are ultimately a function of the proportion of a polygon that contains *in situ* subglacial till that is suitable for sampling. This helps to inform the planning and execution of till sampling surveys by identifying areas where subglacial till can be readily sampled and areas where extra efforts or alternative sampling methods or materials may be required.

Drift thickness mapping provides an indication of the relative thickness of Quaternary sediment cover based on the results of the surficial geology interpretations. Drift thickness estimations consider the interpreted surface expression of map units (polygons) and the potential for preserved stratigraphic sequences. Stratigraphic sequences are assumed where depositional environments were non-erosional and pre-existing materials are likely preserved (*e.g.*, beneath glaciolacustrine sediments and ablation till). The interpretations have not been calibrated with known depths to bedrock. Drift thickness maps can be used to inform bedrock mapping and prospecting programs because they identify areas where bedrock outcrops are likely present or where bedrock is overlain by shallow cover and may be accessed with hand tools. This mapping can also be used in combination with till sampling suitability to identify areas where drilling or trenching may be required to sample till, or provide information such as ice flow direction for drift-based exploration programs.

The glacial landforms of the Saxton Lake map area (NTS map sheet 093J/03) were previously mapped at a reconnaissance scale by Tipper (1971a). The map area lies primarily within the Nechako Plain, with northwest and southwest portions in the Fraser Basin, which are subdivisions of the Interior Plateau (Holland, 1976). The region is characterized by flat to gently rolling topography with surface elevation between approximately 700 m and 900 m. Thick glacial sediments cover much of the region and exposed bedrock is extremely rare. Streamlined till (**Ts**) is abundant throughout the northwest portion of the map area, with intervening organics commonly developing in surface depressions. Roughly northwest-southeast-trending ice-marginal meltwater channels demarcate the pattern of glacial retreat. Continuous accumulations of glaciolacustrine sediments were deposited in the former Glacial Lake Fraser, which inundated the eastern portion of the map area (Tipper 1971b; Clague 1988; Plouffe 1997; Sacco *et al.*, 2017). An extensive glaciofluvial system that includes a large meltwater channel, hummocky ice-contact glaciofluvial deposits (**GFh**) and major esker complexes (**GFr**) extends southeast across the map area to the glaciolacustrine sediments. This extensive meltwater feature may have formed when a large glacial lake located northwest of the map area drained beneath the ice margin into glacial lake Fraser (Sacco *et al.*, 2017). Ablation till (**Tu, Th**) is common at low elevations throughout the map area and adjacent to the esker complex. The dominant ice-flow direction throughout the glacial maximum was towards the northeast. During deglaciation, reduced influence from stagnating ice sources in the south and increased influence from source areas in the west caused an eastward transition of the ice-flow direction throughout the map area.

The northwest and north-central parts of the Saxton Lake map area are most suitable for till sampling. In these areas, streamlined subglacial till is common with only localized occurrences of other materials. The eastern and southern parts of the map area are less suitable to till sampling due to the extensive cover of glaciolacustrine sediment and ablation till. Small deposits of subglacial till occur on topographic highs throughout these poorly suited regions and may provide sufficient sampling opportunities in some areas for regional sampling programs. Subglacial till is likely preserved beneath ablation till and glaciolacustrine sediments due to the non-erosive nature of their deposition. Where these materials are thin (*e.g.*, Tu, GLv), underlying subglacial till may be accessed using hand-tools or in deep road cuts. Where materials are thicker, machine-supported sampling may be required to collect subglacial till samples.

Acknowledgements

Funding for this project was provided by Geoscience BC. We thank Wayne Jackaman at Noble Exploration Services Ltd. and his team for providing additional ground observations collected during the till sampling program.

Recommended citation

McGregor, C. and Sacco, D.A. 2021, Surficial geology of the Saxton Lake map area (NTS 093J/03), British Columbia. Geoscience BC map 2021-03-06a, scale 1:50 000

References

Clague, J.J. 1988. Quaternary stratigraphy and history, Quesnel, British Columbia. Géographie physique et Quaternaire, 42: 279–288.

Deblonde, C., Cocking, R.B., Kerr, D.E., Campbell, J.E., Eagles, S., Everett, D., Huntley, D.H., Inglis, E., Parent, M., Plouffe, A., Robertson, L., Smith, I.R. and Weatherston, A. (2018): Surficial data model: the science language of the integrated Geological Survey of Canada data model for surficial geology maps (ed. ver. 2.3.14); Geological Survey of Canada, Open File 8236, 50 p.

Ferbey, T., 2014. Basal till potential of the Nadina River map area (NTS 093E/15), British Columbia. British Columbia Ministry of Energy and Mines, British Columbia Geological Survey Open File 2014-02, scale 1:50 000.

Holland, S.S., 1976. Landforms of British Columbia: a physiographic outline. British Columbia Ministry of Energy and Mines, and Petroleum Resources, British Columbia Geological Survey, Bulletin 48, 138 p.

Lefebure, D.V. and Höy, T. (ed.), 1996. Selected British Columbia mineral deposit profiles, Volume 2 – More metallic deposits; British Columbia Ministry of Energy, Mines and Petroleum Resources, British Columbia Geological Survey Open File 1996-13, 172 p.

Lefebure, D.V. and Ray, G.E. (ed.), 1995. Selected British Columbia mineral deposit profiles, Volume 1 – Metallics and coal; British Columbia Ministry of Energy, Mines and Petroleum Resources, British Columbia Geological Survey Open File 1995-20, 136 p.

Levson, V.M., 2001. Regional till geochemical surveys in the Canadian Cordillera: sample media, methods, and anomaly evaluation. In: McClenaghan, M.B., Bobrowsky, P.T., Hall, G.E.M., and Cook, S.J. (Eds.), Drift Exploration in Glaciated Terrain. Geological Society, Special Publication 185, p.45-68.

MINFILE, 2020. MINFILE Mineral Occurrences Database. British Columbia Ministry of Energy Mines and Petroleum Resources, British Columbia Geological Survey. MINFILE digital data, posted October 19, 2020, URL https://catalogue.data.gov.bc.ca/dataset/minfile-mineral-occurrence-database [February, 2021].

Natural Resources Canada (2015): Canadian Digital Elevation Model; Natural Resources Canada, URL <https://open.canada.ca/data/en/dataset/7f245e4d-76c2-4caa-951a-45d1d2051333> [October 2019]

Plouffe, A. 1997. Ice-flow and late-glacial lakes of the Fraser glaciation, central British Columbia. In Current Research, Geological Survey of Canada, Paper 1997-A/B, pp. 133–143.

Proudfoot, D.N., Bobrowsky, P.T., and Meldrum, D.G., 1995. Drift exploration potential maps derived from terrain geology maps. In: Bobrowsky, P.T., Sibbick, S.J., Newell, J.M., and Matsyek, P.F. (Eds.), Drift Exploration in the Canadian Cordillera, British Columbia Ministry of Energy and Mines, British Columbia Geological Survey Paper, 1995-2, p.23-31.

Sacco, D., Ferbey, T., and Jackaman, W., 2014. Basal till potential of the Clusko River map area (NTS 093C/09), British Columbia. British Columbia Ministry of Energy and Mines, British Columbia Geological Survey Open File 2014-06, Geoscience BC Map 2014-06-01, scale 1:50 000.

Sacco, D.A., Ward, B.C., Lian, O.B., Maynard, D.E., Geertsema, M. 2017. Quaternary geology of part of the McLeod Lake map area (NTS 093J), central British Columbia: lithostratigraphy, glacial history, and chronology. Canadian Journal of Earth Sciences v.54, pp. 1063–1084.

Shilts, W., 1993. Geological Survey of Canada's contributions to understanding the composition of glacial sediments. Canadian Journal of Earth Sciences, 30, p. 333-353.

Tipper, H.W., 1971a. Surficial geology, McLeod Lake. Geological Survey of Canada, Map 1287A, scale 1:250,000

Tipper, H.W. 1971b. Multiple glaciations in central British Columbia. Canadian Journal of Earth Sciences, 8: 743–752. doi:10.1139/e71-072.

Ward, B.C., Leybourne, M.I., Sacco, D.A., Lett, R.E. and Struik, L.C., 2013a. Drift prospecting for porphyry copper-gold, volcanogenic massive sulphide mineralization and precious and base metal veins within the QUEST project area, central British Columbia (NTS 093J); Geoscience BC, Report 2013-15, 59 p., URL <http://www.geosciencebc.com/reports/gbcr-2013-15/>